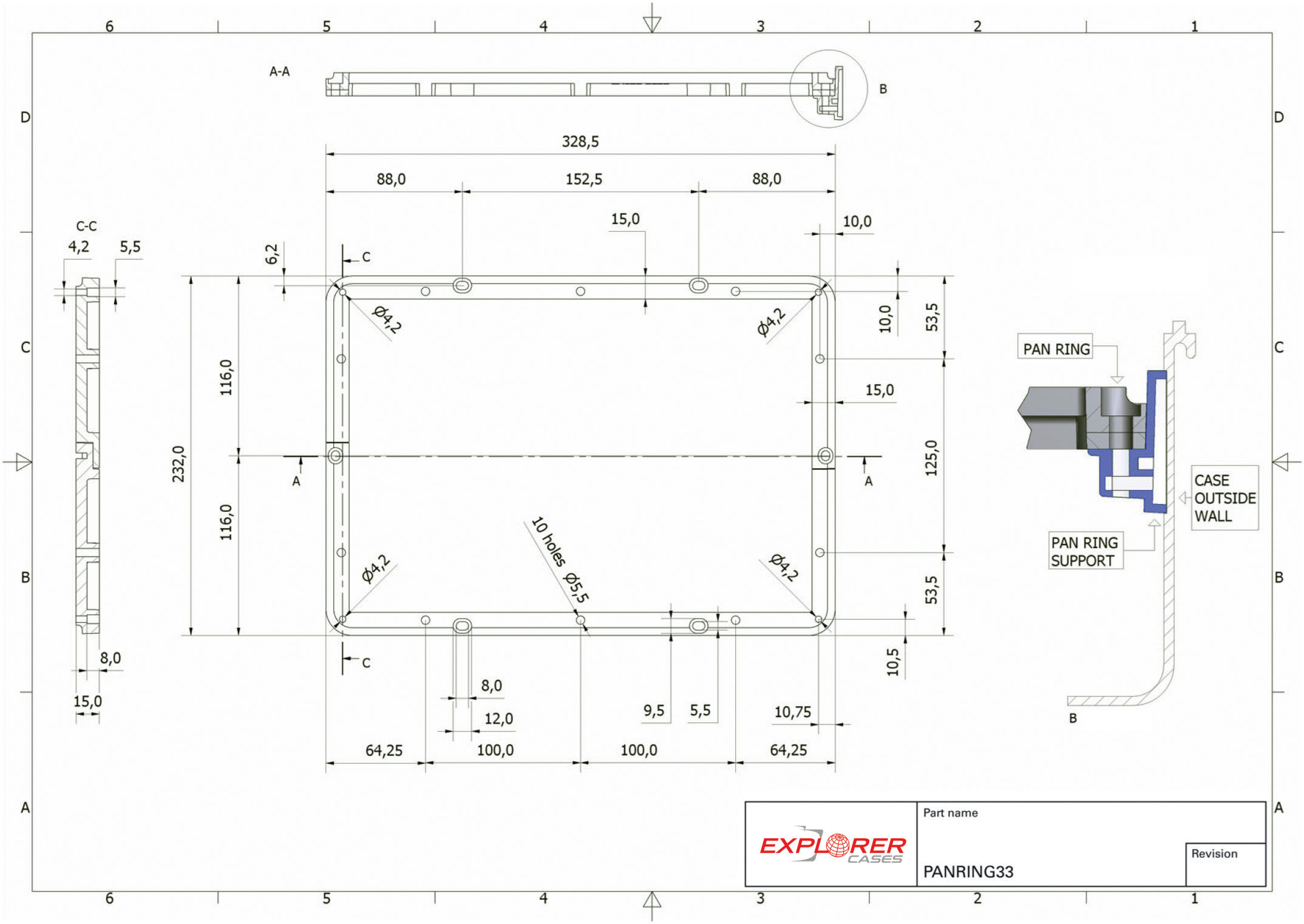
A-A
B
328,5
88,0
152,5
88,0
15,0
10,0
C-C
4,2
5,5
6,2
C
Ø4,2
Ø4,2
10,0
53,5
116,0
15,0
232,0
A
A
125,0
116,0
10 holes Ø5,5
Ø4,2
Ø4,2
53,5
8,0
15,0
10,5
8,0
12,0
9,5
5,5
10,75
64,25
100,0
100,0
64,25
PAN RING
CASE OUTSIDE WALL
PAN RING SUPPORT
B
EXPLORER CASES
Part name
PANRING33
Revision